MONITORING WELL CONSTRUCTION DETAILS

(SEE NOTE 1 BELOW)

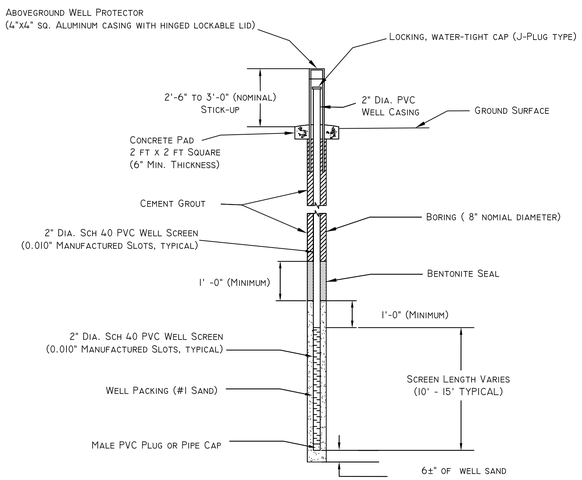

DETAIL 1 - SHALLOW WELL CONSTRUCTION DETAIL (TYPICAL)

NOT TO SCALE

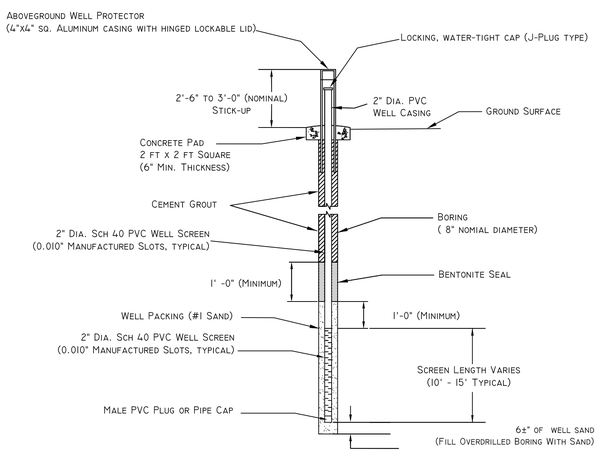

DETAIL 2 - DEEP WELL CONSTRUCTION DETAIL (TYPICAL)

NOT TO SCALE

MONITORING WELL INSTALLATION NOTES

General

1. All monitoring wells to be installed in accordance with North Carolina Administrative Code Title Subchapter 2C Section .0108 (Standards of Construction for Wells Other than Water Supply) and under the responsibility of an on-site North Carolina registered well driller.
2. The wells will be installed under the on-site supervision of a North Carolina registered geologist.

Soil Borings and Well Installation

3. Prior to drilling each soil boring, all down-hole equipment and tools will be cleaned by washing with high pressure hot water. A designated remote cleaning area will be established in the field. Contractor will provide for restoration of the cleaning area by evenly spreading soil cuttings, seeding, and covering with straw.
4. Soil borings will be performed with 4¼-inch (minimum) inside diameter hollow stem augers. Standard Penetration Testing (SPT) (ASTM D 1586) and split-spoon sampling will be performed on the deep well location at 5 foot intervals (or closer spacing if required). No SPT's or split-spoon sampling is required for the shallow wells.
5. At each Shallow Well location, a Type II well will be constructed with two-inch (2") diameter schedule 40 PVC screen and casing. Each of these wells will typically have a fifteen-foot (15') well screen having manufactured 0.010-inch slots. In general, the well screen typically will be set so that 10 feet of screen is below the static groundwater level. The Project Geologist shall contact Duke for direction on the specific elevation of the well screen, prior to final placement of the well.
6. #1 well sand will be used to backfill the annulus surrounding the screen of the Shallow Wells.
7. At each Deep Well location, a Type II well will be constructed with two-inch (2") diameter schedule 40 PVC screen and casing. Soil borings for the Deep Wells will be performed to auger refusal. Upon auger refusal, each deeper well boring will be extended a minimum of ten feet (10') into bedrock using rock coring (minimum NQ diameter) techniques.
8. The well screen for the Deep Wells will typically be a five-foot (5') well screen having manufactured 0.010-inch slots. In general, the well screen will be positioned below auger refusal to intercept the water bearing zone in bedrock. The Project Geologist shall contact Duke for direction on the specific elevation of the well screen, prior to final placement of the well.
9. #2 well sand will be used to backfill the annulus surrounding the screen of the Deep Wells.
10. For both Shallow and Deep wells, the sand pack shall extend a minimum of one foot above the top of the screen. Above the sand pack the contractor shall install a one foot thick bentonite seal hydrated with potable water. Cement grout will be placed in the annular space between the PVC casing and the borehole above the bentonite seal and extending to the ground surface.
11. Soil borings, rock cores, and well construction will be logged by the Project Geologist. Soil samples will be observed, visually classified, and photographed in the field by the on-site geologist for origin, consistency/relative density, color, and soil type in accordance with the Unified Soil Classification System (ASTM D2487/D2488). Rock cores will be classified for hardness, color, rock type, degree of weathering, degree of fracturing, recovery, rock quality designation (RQD), and any other identifying/pertinent features.

Well Completion

12. Each well will be finished at the ground surface with a two-foot (2') square concrete well pad and new four-inch (4") aluminum above grade (Stick-up) lockable cover. Contractor will provide, stamp, and install permanent well tags on the above grade covers in accordance with North Carolina Well Regulations. Duke Energy will provide locks.
13. Contractor will write well name legibly in moist concrete pad.
14. Depending on the final location, Duke may elect to install steel bollards to protect the wells. Typical installation details for steel bollards are shown on Details 3, 4, and 5.
15. Upon completion of the wells, Contractor will ensure restoration of the wellhead area and the drilling access roadway (and any other areas of the property damaged by drilling activities). Soil cuttings and coring water will not require collection and offsite disposal. Rather, Contractor will clean all soil cuttings from the wellhead areas, transport them to a location to be designated on site, and spread them evenly. Contractor will seed and straw all wellhead areas, drilling access roadways, and the soil cuttings disposal area(s).

Well Development

16. Contractor will develop all installed wells by appropriate measures (e.g., agitation, surging, pumping, etc.). Development will continue until development water is relatively clear and sediment free. Development water will not require containerization and can be disposed on the nearby ground surface.
17. Development records will be prepared under the direction of the Project Geologist and include development method(s), water volume removed, and recordation of temperature, pH, conductivity, and turbidity.

BOLLARD INSTALLATION DETAILS

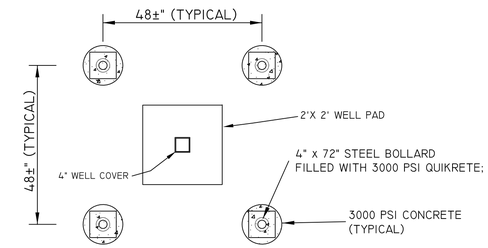

DETAIL 3 - SINGLE WELL BOLLARD PLAN
FOR 2'x2' WELL PAD

NOT TO SCALE

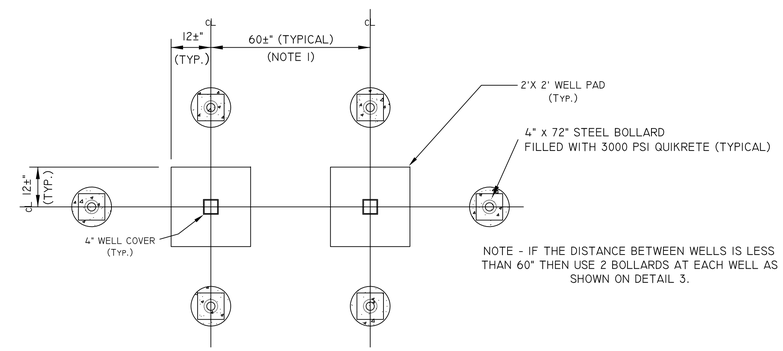

DETAIL 4 - WELL PAIR BOLLARD PLAN
FOR 2'x2' WELL PAD

NOT TO SCALE

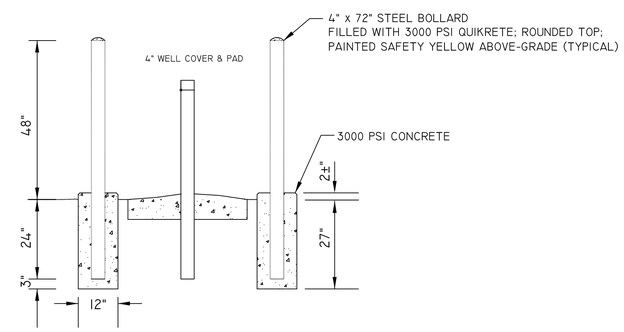

DETAIL 5 - TYPICAL WELL BOLLARD ELEVATION
SHOWN FOR SINGLE 2'x2' WELL PAD

NOT TO SCALE

Notes

1. Monitoring Well Construction Details, Monitoring Well Installation Notes, and Bollard Installation Details shown on this sheet are for groundwater monitoring wells installed by Duke Energy during 2010. All of this information was provided by Duke Energy.
2. Installed well locations are shown on Sheet 1 of 2.
3. Reference Ash Basin Monitoring Well Installation Report, Dan River Steam Station, dated January 31, 2011 Mac-Tec Project 6288-10-5284 for well installation details.

SHEET NO.	OF
2	2

CONSTRUCTION DETAILS
ASH BASIN COMPLIANCE
GROUNDWATER MONITORING WELLS

DUKE ENERGY DAN RIVER STEAM STATION
ROCKINGHAM COUNTY, NORTH CAROLINA

Duke Energy®

REV.	DATE	DESCRIPTION	BY	CHK	APV
0	3/22/11	SUBMITTED TO NC DENR	WMM	JDL	-

P:\Duke - Ash Basin GW Support - 2370\2370.03 As-Built Drawings - Ash Basin\Well Construction Figure - All Plants\Sheet 2 - Well Details.dwg

ALTAMONT ENVIRONMENTAL, INC.
ENGINEERING & HYDROGEOLOGY
231 HAYWOOD STREET, ASHEVILLE, NC 28801
TEL.828.281.3350 FAC.828.281.3351
WWW.ALTAMONTENVIRONMENTAL.COM
NC ENGINEERING FIRM #C-2185

DRAWN BY: BILL MILLER
PROJECT MANAGER:BILL MILLER
CLIENT: DUKE ENERGY

NOT TO SCALE

NORTH CAROLINA PROFESSIONAL SEAL 17661 ENGINEER WILLIAM M. MILLER
3/22/11